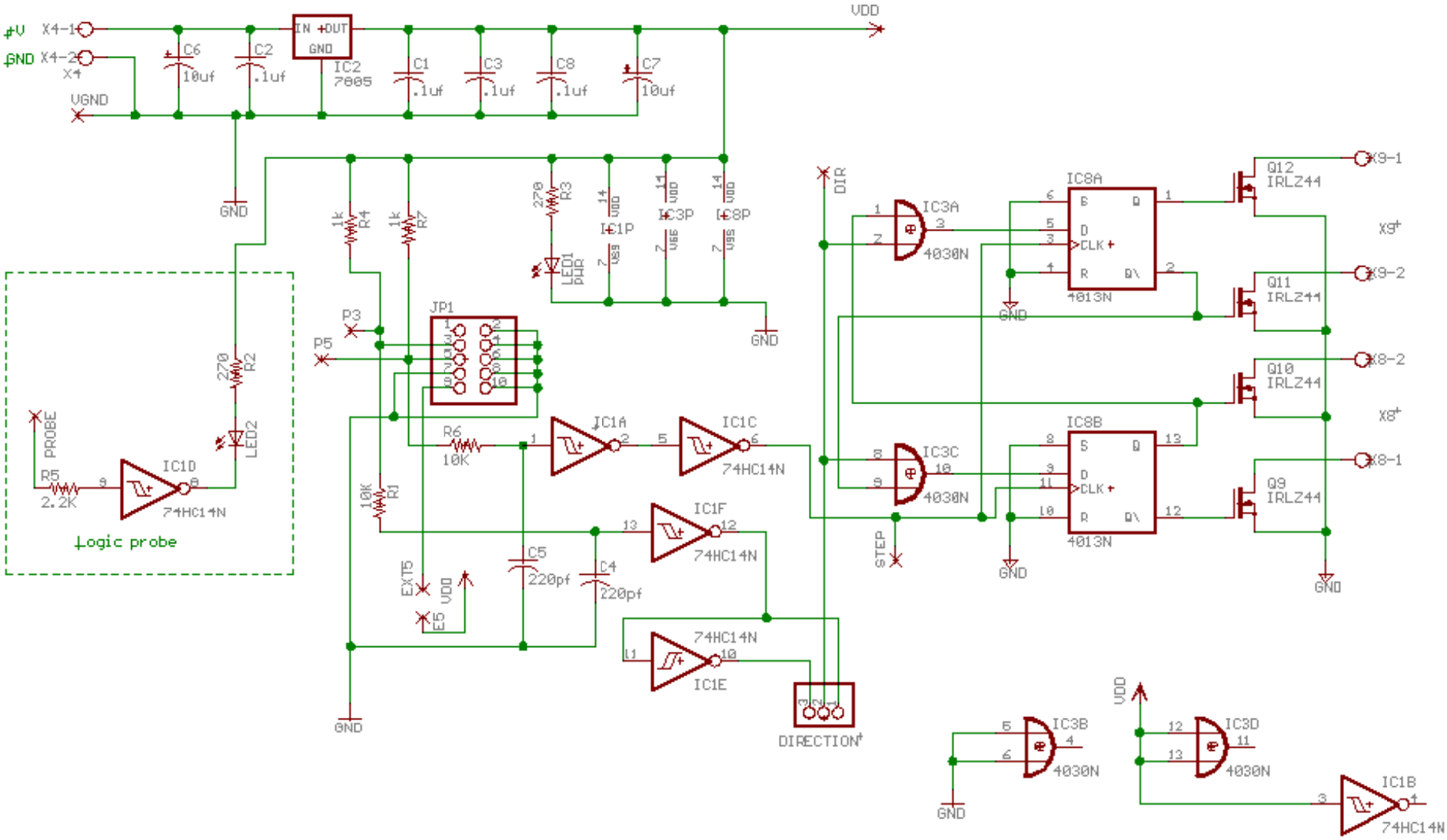
+V
X4-1
GND
X4-2
X4
VGND
C6
10uf
C2
.1uf
IN +OUT
GND
IC2
7805
C1
.1uf
C3
.1uf
C8
.1uf
C7
10uf
VDD
GND
1k
R4
1k
R7
270
R3
IC1P
IC3P
IC8P
LED1
PWR
P3
P5
JP1
270
R2
LED2
PROBE
R5
2.2K
IC1D
74HC14N
Logic probe
R6
10K
IC1A
IC1C
74HC14N
10K
R1
IC1F
74HC14N
C5
220pf
C4
220pf
EXT5
VDD
E5
74HC14N
IC1E
GND
DIR
IC3A
4030N
IC8A
4013N
Q12
IRLZ44
X9-1
X9+
Q11
IRLZ44
X9-2
Q10
IRLZ44
X8-2
X8+
IC3C
4030N
IC8B
4013N
Q9
IRLZ44
X8-1
STEP
GND
DIRECTION
IC3B
4030N
IC3D
4030N
IC1B
74HC14N