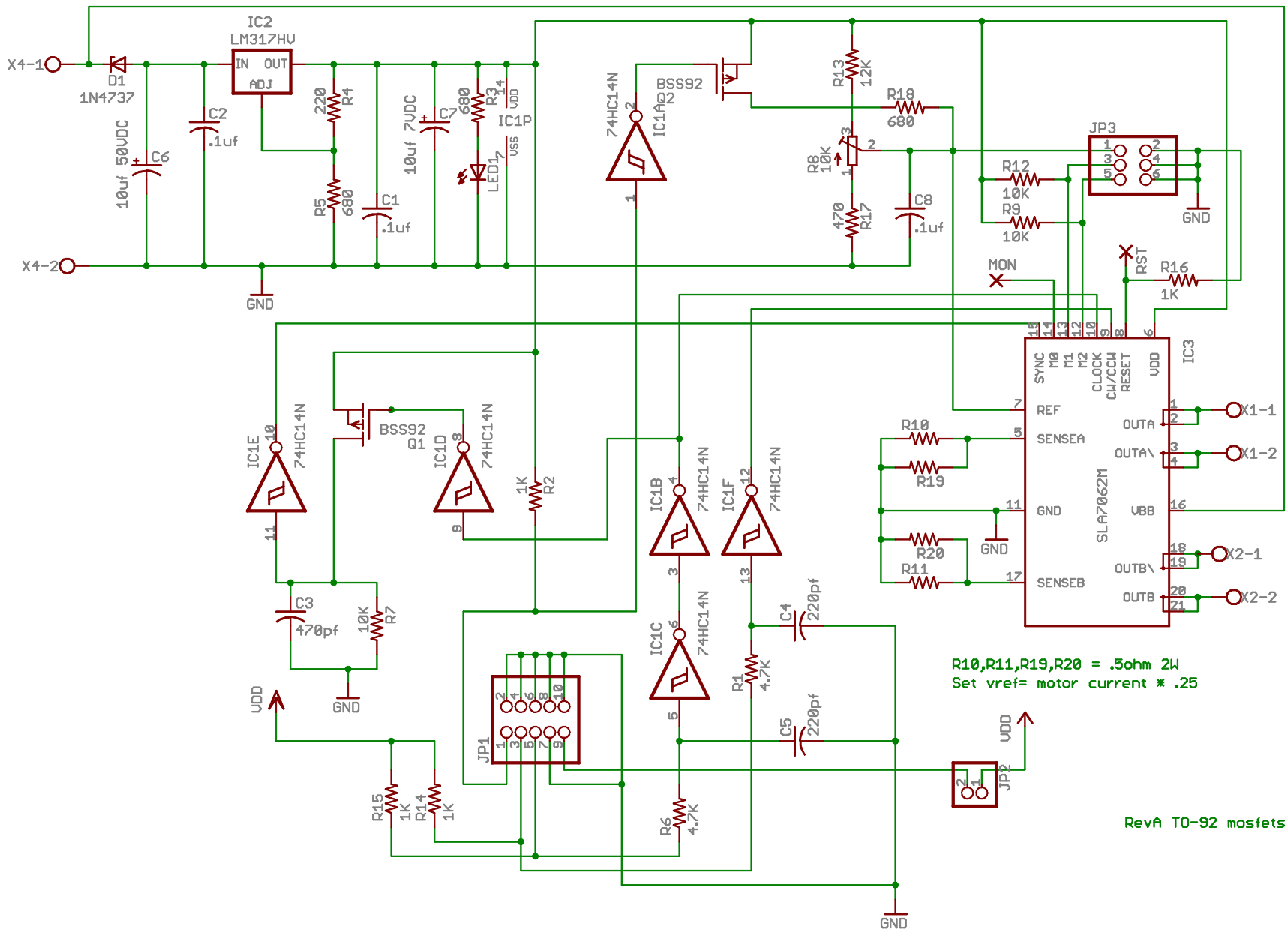
X4-1
X4-2
D1
1N4737
C6
10uf 50VDC
C2
.1uf
IC2
LM317HV
IN OUT
ADJ
R4
220
R5
680
C1
.1uf
C7
10uf 7VDC
R3
680
LED1
IC1P
VDD
VSS
GND
IC1A
74HC14N
BSS92
Q2
R13
12K
R18
680
R8
10K
R17
470
C8
.1uf
JP3
R12
10K
R9
10K
MON
RST
R16
1K
IC3
SLA7062M
SYNC
M0
M1
M2
CLOCK
CW/CCW
RESET
VDD
REF
SENSEA
GND
SENSEB
OUTA
OUTA\
VBB
OUTB\
OUTB
X1-1
X1-2
X2-1
X2-2
R10
R19
R20
R11
IC1E
IC1D
BSS92
Q1
1K
R2
C3
470pf
10K
R7
IC1B
IC1F
IC1C
R1
4.7K
C4
220pf
C5
220pf
R6
4.7K
JP1
JP2
R15
1K
R14
1K
R10,R11,R19,R20 = .5ohm 2W
Set vref= motor current * .25
RevA TO-92 mosfets