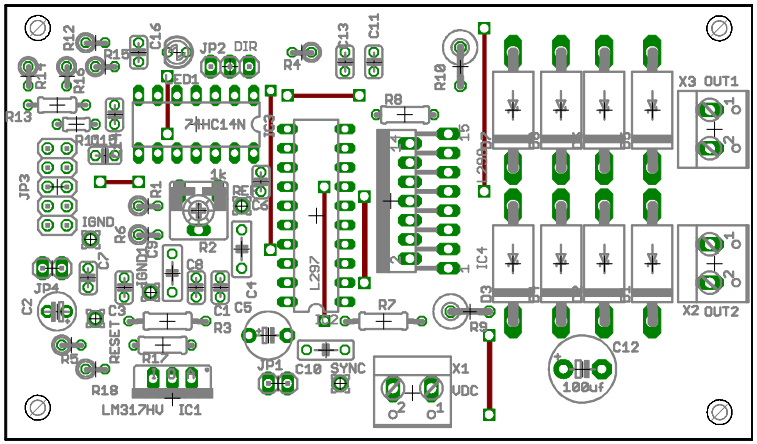
R12
R15
C16
JP2
DIR
R14
C13
C11
R10
X3
OUT1
R17
R16
ED1
R13
74HC14N
R8
IC3
IC6
L298
JP3
R11
C14
R1
1k
R5
C6
IGND
R6
C9
R2
C7
IGND
C8
C4
L297
IC4
JP4
C2
C3
C1
C5
R7
D3
R9
X2
OUT2
R3
RESET
R5
R17
JP1
C10
SYNC
C12
100uf
R18
LM317HV
IC1
X1
VDC